Cambridge Assessment International Education

Cambridge IGCSE™

CANDIDATE NAME	

CENTRE NUMBER						CANDIDATE NUMBER				

0943611324

DESIGN & TECHNOLOGY **0445/42**

Paper 4 Systems & Control **May/June 2024**

1 hour

You must answer on the question paper.

No additional materials are needed.

INSTRUCTIONS

- Section A: answer **all** questions.
- Section B: answer **one** question.
- Use a black or dark blue pen. You may use an HB pencil for any diagrams or graphs.
- Write your name, centre number and candidate number in the boxes at the top of the page.
- Answer in the space provided.
- Do **not** use an erasable pen or correction fluid.
- Do **not** write on any bar codes.
- You may use a calculator.

INFORMATION

- The total mark for this paper is 50.
- The number of marks for each question or part question is shown in brackets [ ].
- All dimensions are in millimetres unless otherwise stated.

This document has **20** pages.

© UCLES 2024

Section A

Answer **all** questions in this section.

1 Fig. 1.1 shows four examples of timber structures used in a building.

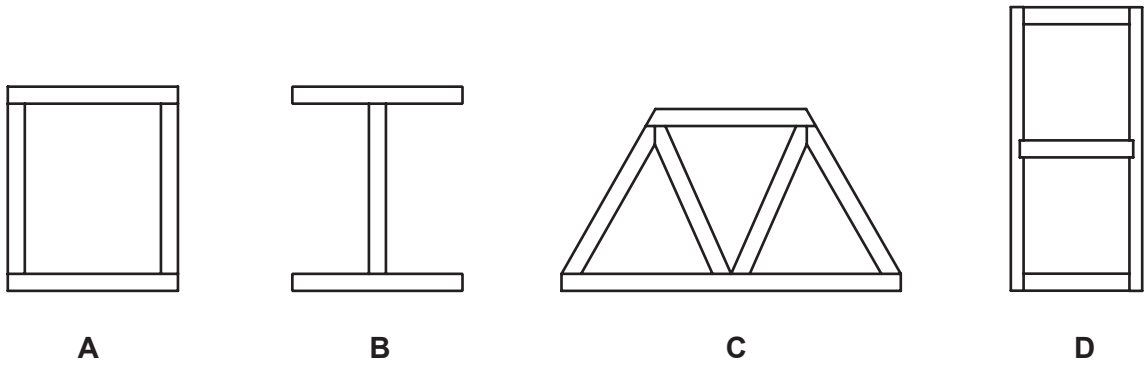

Fig. 1.1

(a) Name the type of structures shown in Fig. 1.1.

..... [1]

(b) Give **two** reasons why structure **B** will be the **least** rigid of the four structures shown.

1 .....

2 .....
[2]

(c) Fig. 1.2 shows structure **C** with a force acting on it.

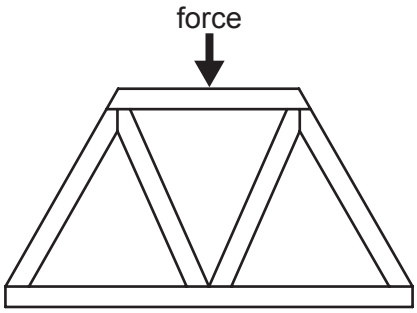

Fig. 1.2

Describe the effect of the force acting on the structure.

.....

.....

..... [2]

2 State the meaning of static load on a structure.

..... [1]

3 A list of materials and properties is given below.
Draw lines to link the material to the property.
One has been done for you.

Material	**Property**
hardwood	can be reformed with heat
aluminium	strong in compression
polyvinyl chloride (PVC)	renewable / sustainable
glass reinforced plastic (GRP)	resistant to corrosion
concrete	lightweight
stainless steel	can be moulded into irregular shape

[4]

4 Use sketches and notes to show **one** example of a first order lever and **one** example of a third order lever. Use the space provided above each label.

first order lever

third order lever

[2]

5 Fig. 5.1 shows three different arrangements of spur gears.

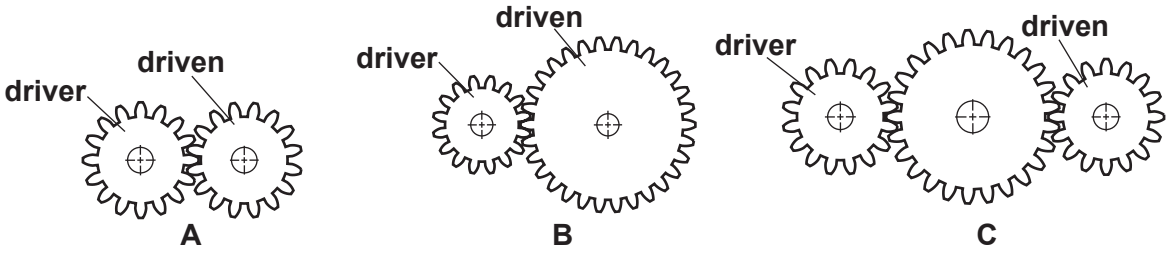

Fig. 5.1

State the change in output at the driven gear for each arrangement.

A .....

B .....

C .....
[3]

6 Fig. 6.1 shows an electric scooter.

Fig. 6.1

Give the conversion of motion that occurs when the motor operates, and the scooter starts to move.

..... motion to ..... motion. [2]

7 Fig. 7.1 shows three component symbols.
State the name of each component symbol.

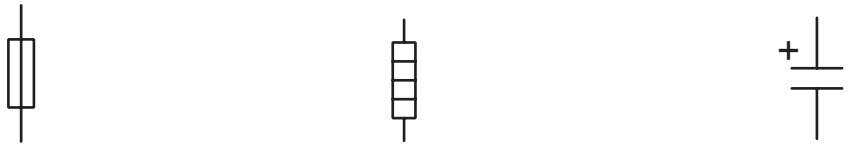

1..... 2..... 3.....

Fig. 7.1

[3]

8 Fig. 8.1 shows two battery symbols.

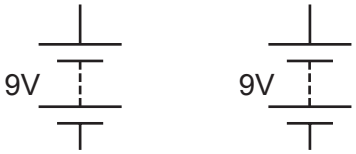

Fig. 8.1

(a) Draw parallel connections between the two batteries. [1]

(b) State the output voltage of the connected batteries.

..... [1]

9 Complete Table 9.1 by adding the missing values.

Table 9.1

Value in multiple units	**Value in ohms** (Ω)
5 kΩ	Ω
0.27 kΩ	Ω
3 MΩ	Ω

[3]

Section B

Answer **one** question from this section.

10 **(a)** Students have been set the task of designing a model suspension bridge to span a gap of 400 mm. The following materials are available for the task:

- softwood strips 250 × 10 × 6
- steel wire 1 mm diameter
- adhesive

(i) Fig. 10.1 shows the gap with steel eyes screwed in to anchor the suspension wires.

Using sketches and notes, draw on Fig. 10.1 to show a possible design for the model suspension bridge. Use only the available materials.

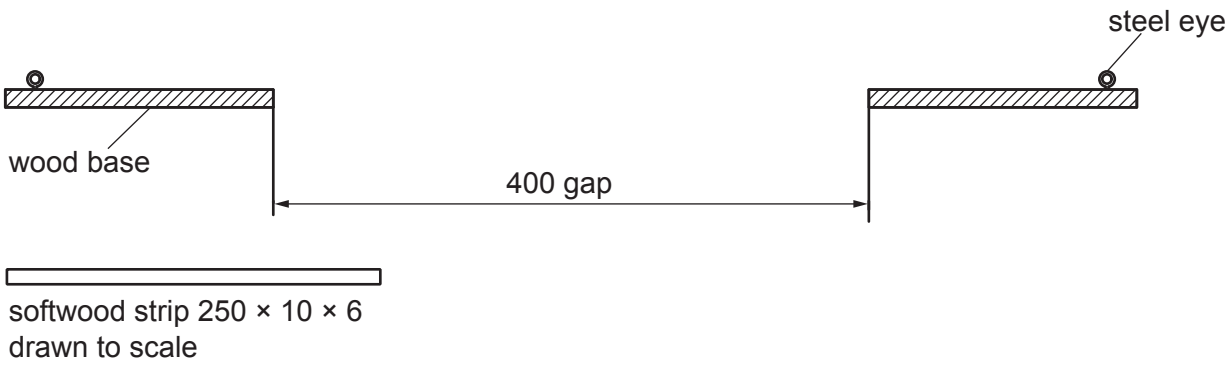

Fig. 10.1

[5]

(ii) Name the force that will act on the suspension wires.

..... [1]

(iii) Give **two** examples of moving loads that act on a full size suspension bridge.

1 .....

2 .....

[2]

(b) Fig. 10.2 shows lengths of timber for a framed building.

Fig. 10.2

(i) Explain why the timber should be carefully selected before use.

.....

.....

..... [2]

(ii) Wood is often identified as a sustainable resource.
State the meaning of the term 'sustainable resource'.

.....

..... [1]

(iii) Fig. 10.3 shows two joints that could be used in the timber framed building.
Explain why the mortise and tenon joint will be a better choice than a nailed joint.

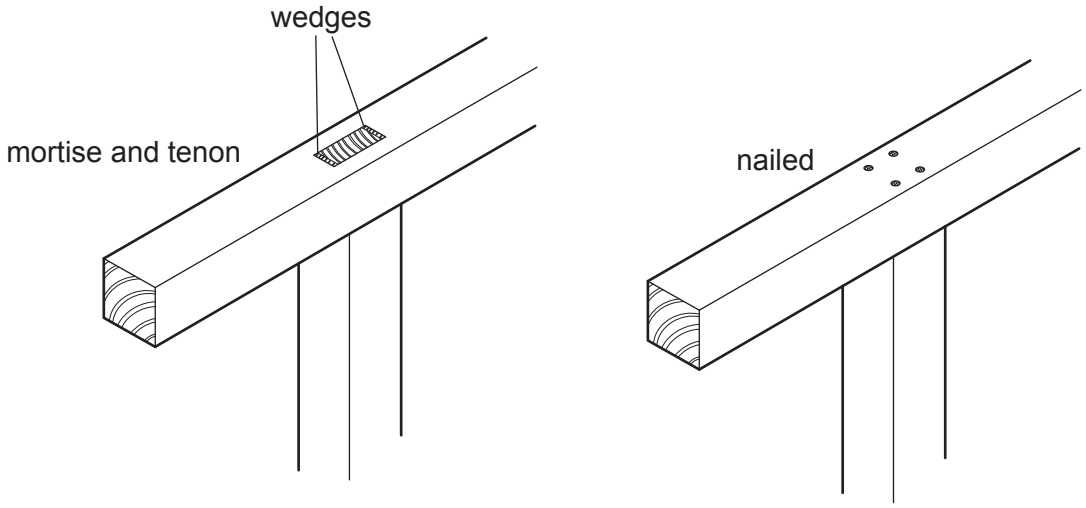

Fig. 10.3

.....

.....

.....

..... [3]

(iv) Fig. 10.4 shows braces used on the mortise and tenon joint.

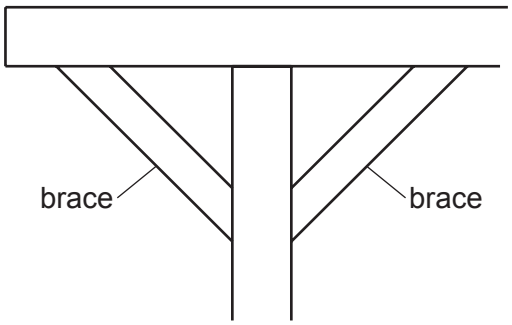

Fig. 10.4

Give **two** reasons for using this type of brace.

1 .....

.....

2 .....

.....
[2]

(c) Use sketches and notes to show what is meant by the following structural members.

(i) Strut

[2]

(ii) Tie

[2]

(iii) Name the forces resisted by a strut and a tie.

Force resisted by a strut .....

Force resisted by a tie .....
[2]

(d) Calculate the stress on a steel rod made of 9 mm diameter wire when a force of 1750 N is applied to it.

.....

.....

.....

..... [3]

11 **(a)** Fig. 11.1 shows a gardening tool used for cutting branches from trees.
It uses a lever combined with a gear mechanism to provide the cutting force.

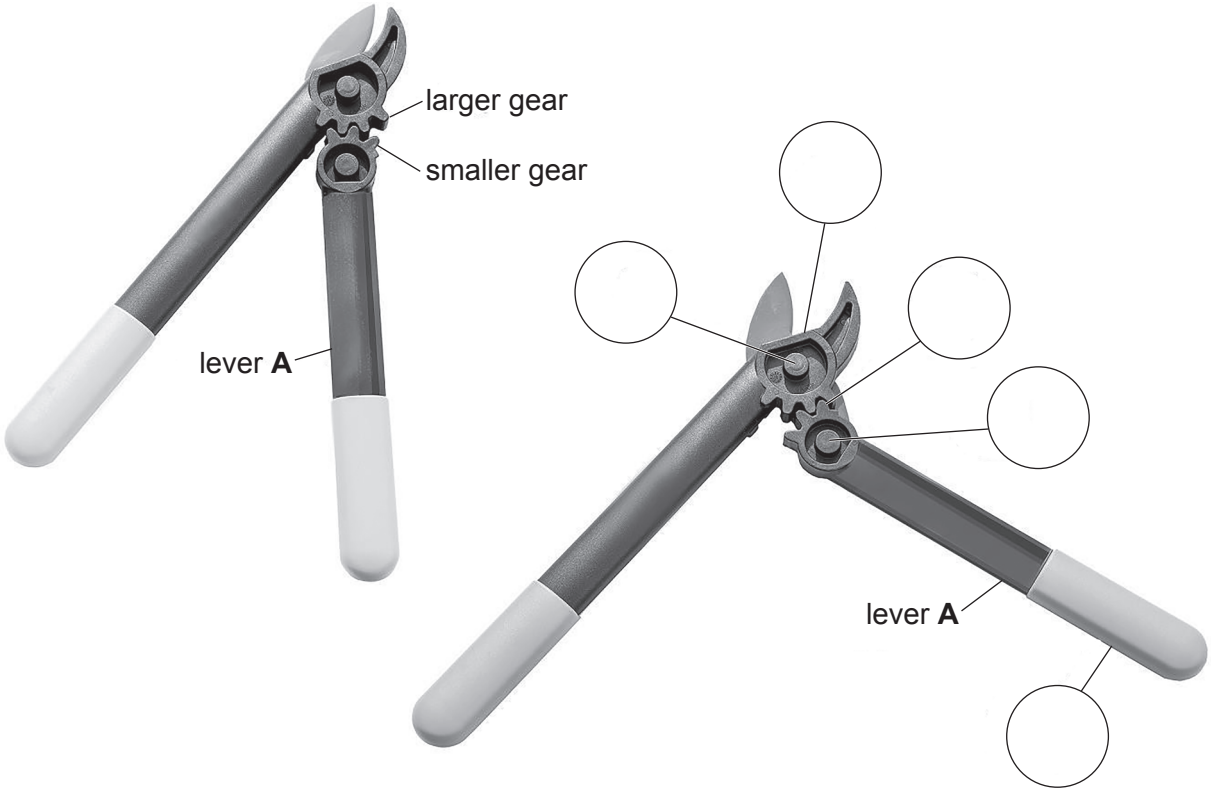

Fig. 11.1

(i) Add the letters '**L**' '**F**' and '**E**' to the correct circles to show the position of the load (**L**), fulcrum (**F**) and effort (**E**) for lever **A**. [3]

(ii) Explain how the gear mechanism reduces the effort needed to operate the gardening tool when cutting a branch.

.....

.....

.....

..... [3]

(iii) Give **one** reason for loss of efficiency when using the gardening tool.

.....

..... [1]

(b) Using examples, describe why the following types of gear would be used.

(i) Bevel gears

.....

.....

..... [2]

(ii) Worm gear

.....

.....

..... [2]

(iii) Rack and pinion gears

.....

.....

..... [2]

(c) Fig. 11.2 shows the drive system on a lawnmower. The drive uses toothed and vee belt pulley systems to reduce the speed of rotation provided by the electric motor.

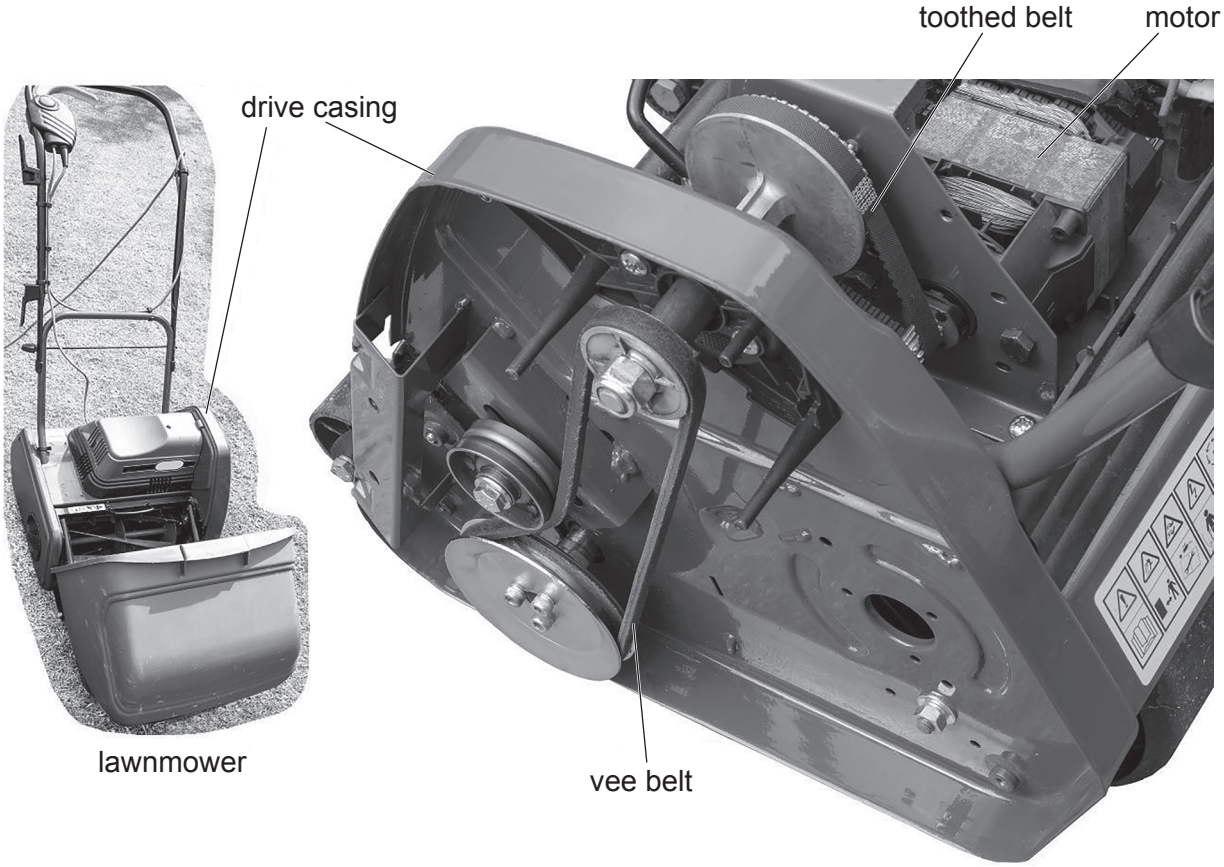

Fig. 11.2

(i) Give **one** reason for using a toothed belt rather than a flat belt for the drive from the motor.

.....

..... [1]

(ii) The final drive to the cutting blades is provided by a vee belt.
Explain how the use of a vee belt could prevent damage to the motor.

.....

.....

..... [2]

(iii) Fig. 11.3 shows the method of tensioning the vee belt.

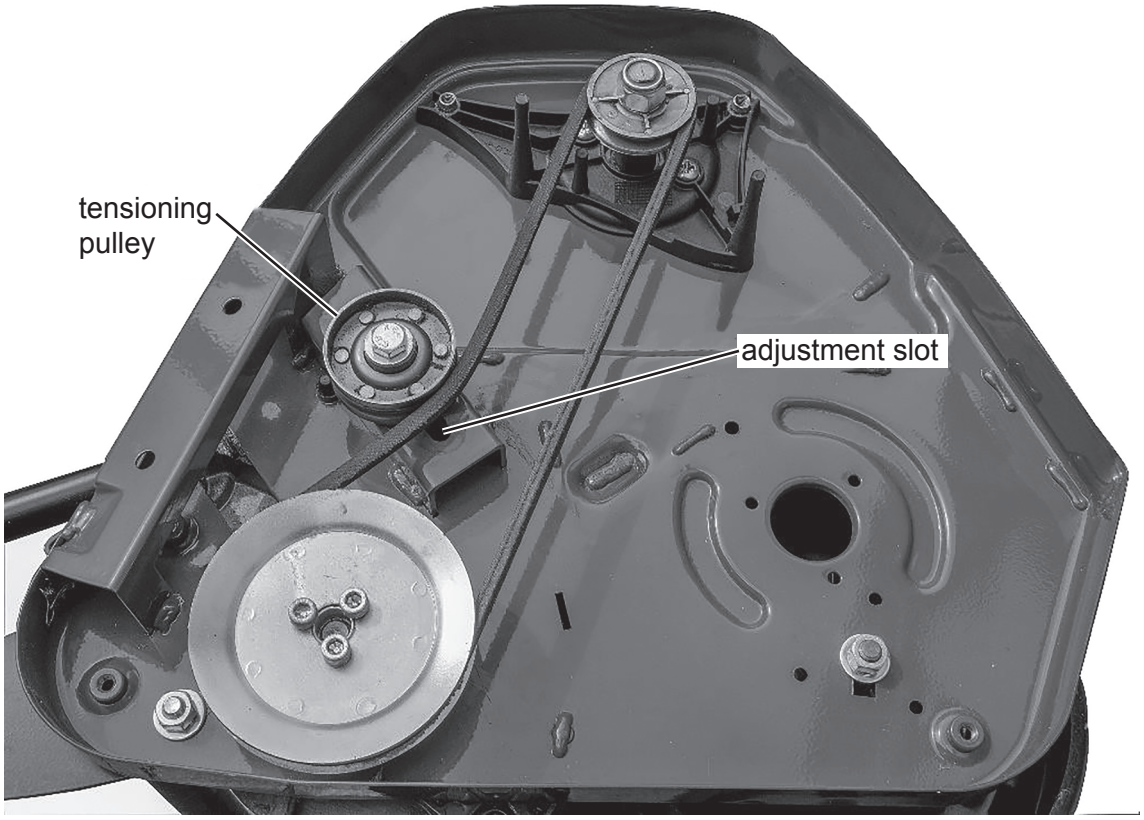

Fig. 11.3

Give **two** reasons why adjustment to the tension of the vee belt may be needed.

1 .....

.....

2 .....

.....

[2]

(iv) Fig. 11.4 shows the belt and pulley system between the motor and the final drive. Calculate the speed of rotation of the final drive when the motor turns at 1000 rpm.

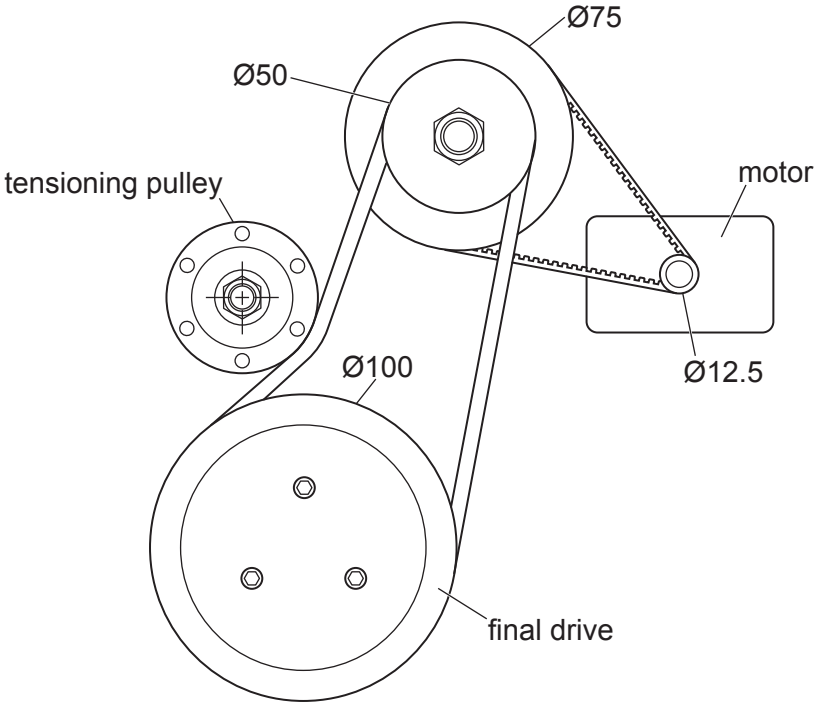

Fig. 11.4

.....

.....

.....

..... [4]

(d) **(i)** State what is meant by the 'pitch' of a screw thread on a bolt.

.....

.....

..... [1]

(ii) Give **two** ways, apart from pitch, that can be used to specify a screw thread on a bolt.

1 .....

2 .....

[2]

12 **(a)** Fig. 12.1 shows a meter used for testing press button switches and a graph of the signal from a correctly working switch.
When the press button switch is pressed and released the LED in the meter will light for 0.75 seconds, if the press button switch is working correctly.

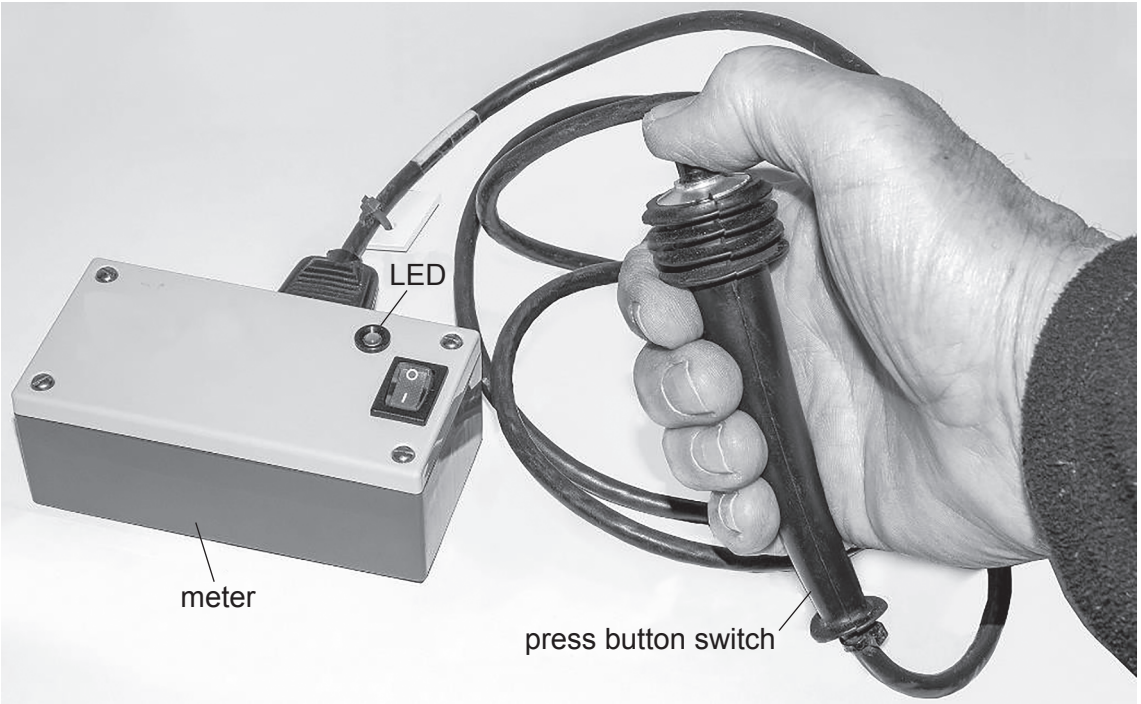

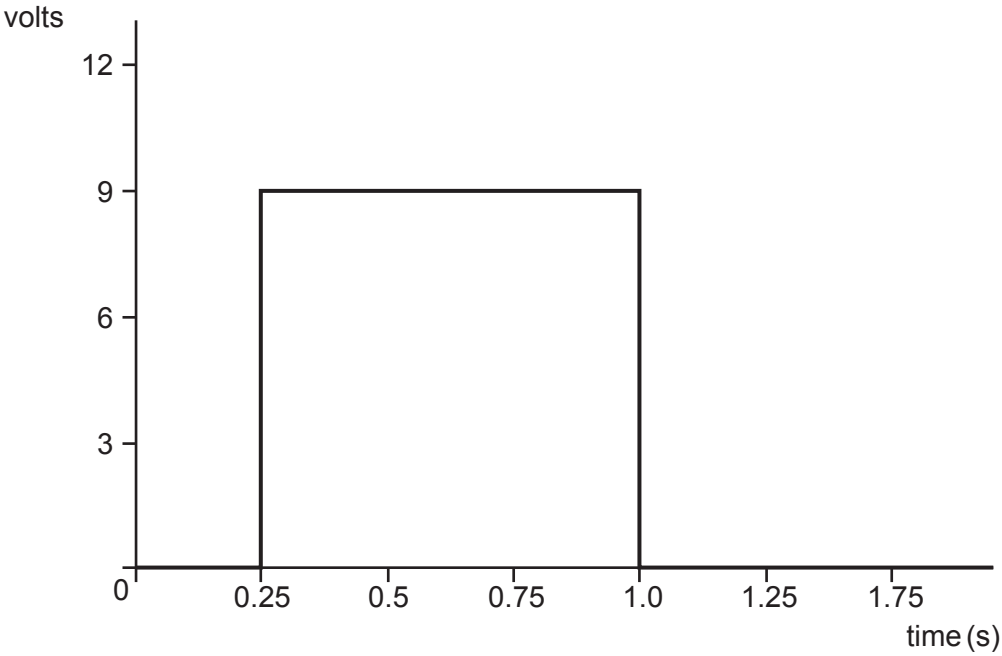

Fig. 12.1

(i) Name the type of circuit that will provide the signal shown in Fig. 12.1.

..... [1]

(ii) Fig. 12.2 shows an incomplete circuit diagram for the meter with the pinout diagram for a 555 IC.

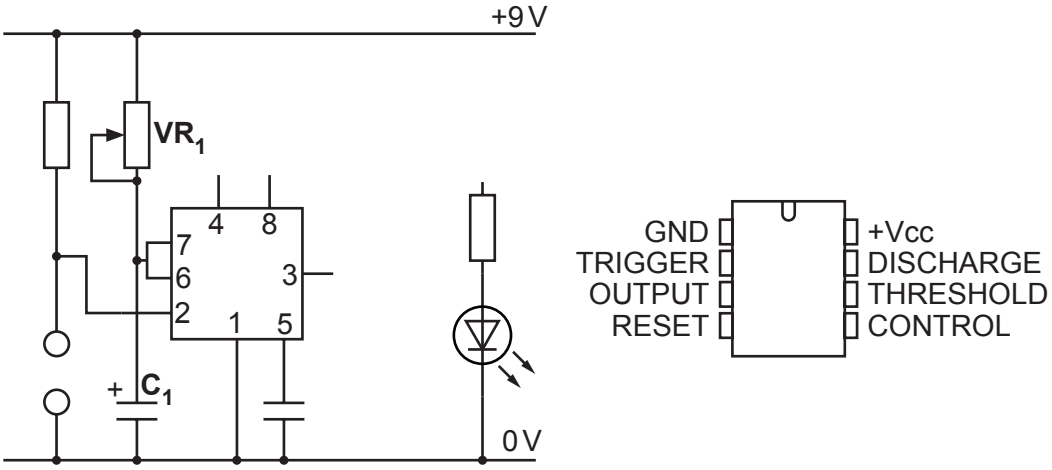

Fig. 12.2

Add the following connections to complete the circuit diagram:

- positive pin on 555 IC to positive rail
- reset pin on 555 IC to positive rail
- 555 IC output to LED.

[3]

(iii) The timing components in Fig. 12.2 are labelled $\mathbf{VR_1}$ and $\mathbf{C_1}$.
The delay required is 0.75 second.
Calculate the resistance value that should be used to set $\mathbf{VR_1}$ if $\mathbf{C_1}$ is 100 μF.
Use the formula t = 1.1 R C.

.....

.....

.....

..... [3]

(iv) When $\mathbf{VR_1}$ has been set to the calculated resistance and the circuit is tested, the delay is found to be less than 0.75 seconds.
Give **one** possible reason for the inaccurate delay.

.....

..... [1]

(v) A programmable IC could have been used instead of the 555 IC.
Give **two** benefits of using a programmable IC for the circuit.

1 .....

.....

2 .....

.....
[2]

(b) An NTC thermistor is to be used in a temperature control circuit to switch on a cooling fan when a set temperature has been reached.

(i) Explain the function of an NTC thermistor.

.....

..... [2]

(ii) Fig. 12.3 shows the temperature sensing circuit, which uses an operational amplifier (OP AMP) to compare two voltages.

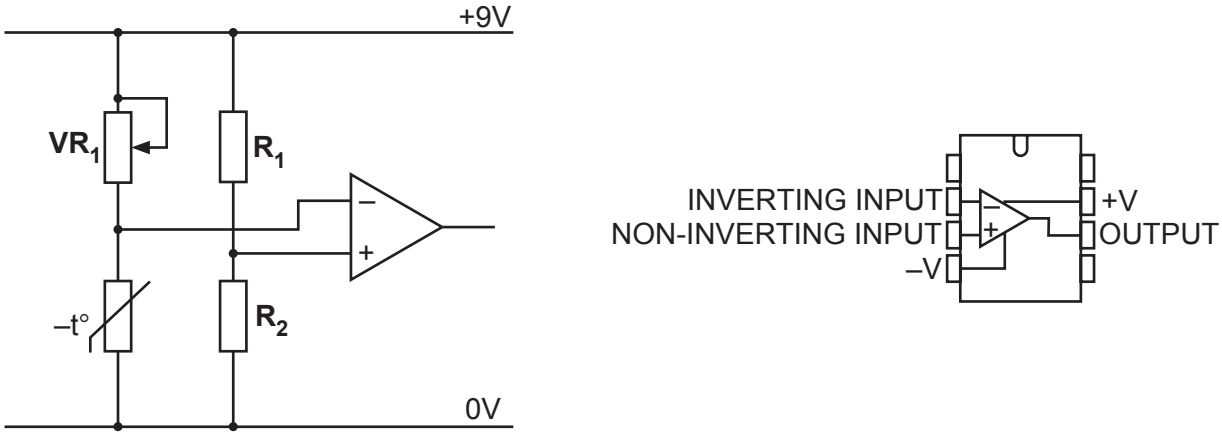

Fig. 12.3

Describe how the output voltage of the OP AMP is decided.

.....

.....

.....

..... [2]

(iii) $\mathbf{R_1}$ and $\mathbf{R_2}$ in Fig. 12.3 form a potential divider which is connected to pin 3 of the OP AMP.

Calculate the voltage at pin 3 if $\mathbf{R_1}$ is 10 kΩ and $\mathbf{R_2}$ is 15 kΩ.

.....

.....

.....

..... [3]

(iv) $\mathbf{VR_1}$ is used in series with the thermistor to provide the input to pin 2 of the OP AMP. Explain why $\mathbf{VR_1}$ is used rather than a fixed value resistor.

.....

.....

..... [2]

(v) The cooling fan will be switched on by a SPDT relay which is controlled by the OP AMP circuit.
A block diagram of the output part of the circuit is shown below.

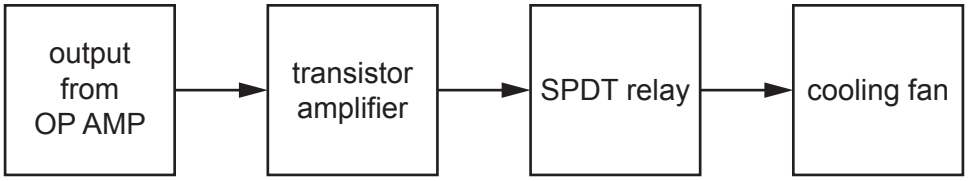

Give **one** reason for using a transistor between the OP AMP output and the SPDT relay.

..... [1]

(vi) Fig. 12.4 shows an incomplete circuit diagram for the output part of the circuit.
Add connections that will allow the relay to operate the cooling fan when the output from the OP AMP goes high.
The 9 V and 12 V supplies use a common 0 V connection.

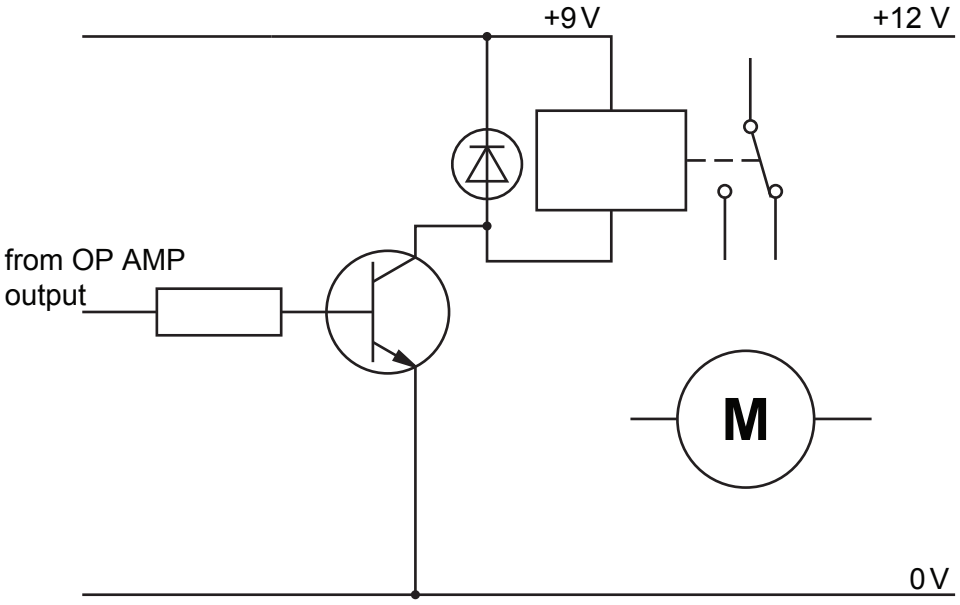

Fig. 12.4

[3]

(c) Give **two** important safety measures to be followed when making PCBs and building circuits.

1 .....

.....

2 .....

.....

[2]

Permission to reproduce items where third-party owned material protected by copyright is included has been sought and cleared where possible. Every reasonable effort has been made by the publisher (UCLES) to trace copyright holders, but if any items requiring clearance have unwittingly been included, the publisher will be pleased to make amends at the earliest possible opportunity.

To avoid the issue of disclosure of answer-related information to candidates, all copyright acknowledgements are reproduced online in the Cambridge Assessment International Education Copyright Acknowledgements Booklet. This is produced for each series of examinations and is freely available to download at www.cambridgeinternational.org after the live examination series.

Cambridge Assessment International Education is part of Cambridge Assessment. Cambridge Assessment is the brand name of the University of Cambridge Local Examinations Syndicate (UCLES), which is a department of the University of Cambridge.

© UCLES 2024